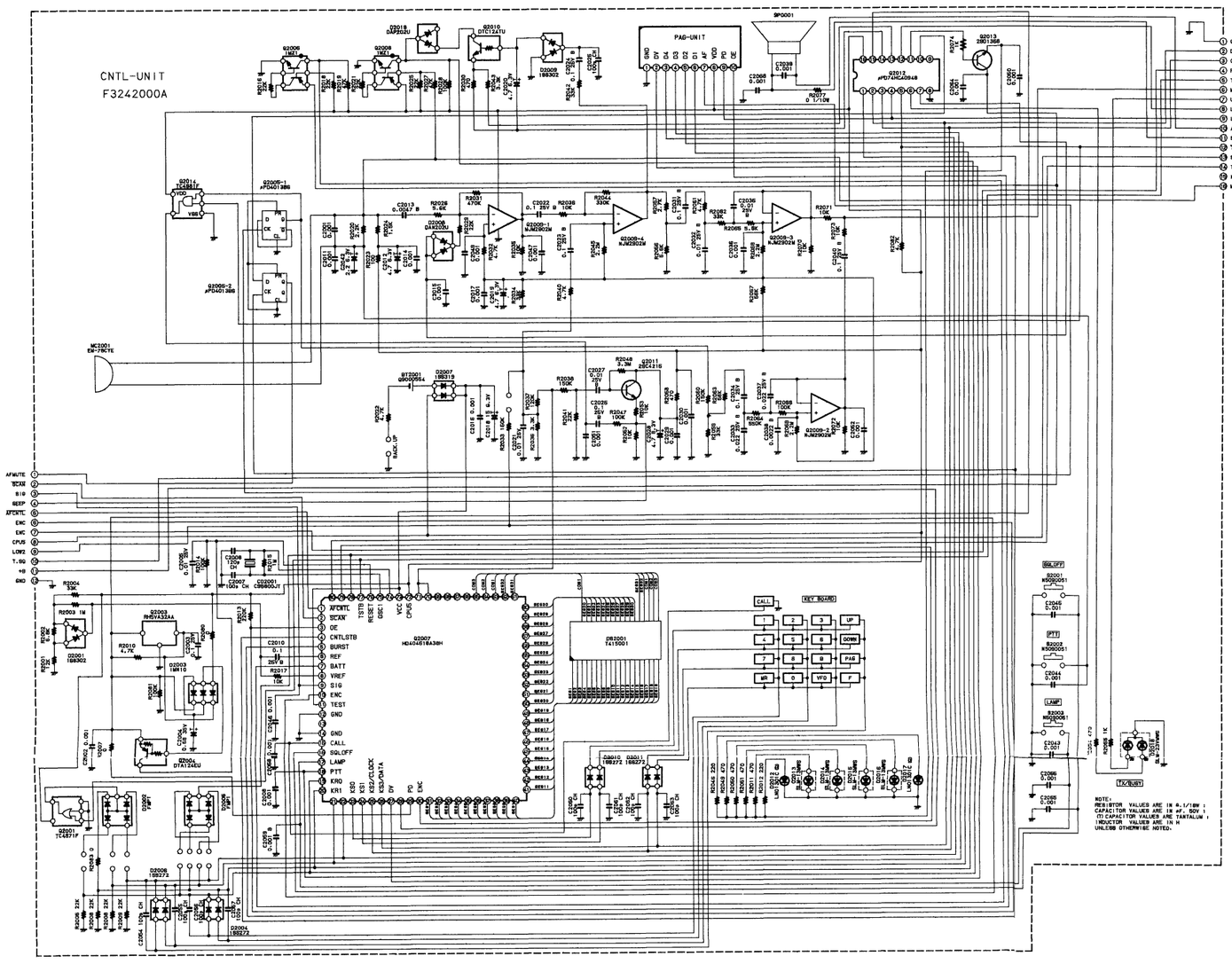

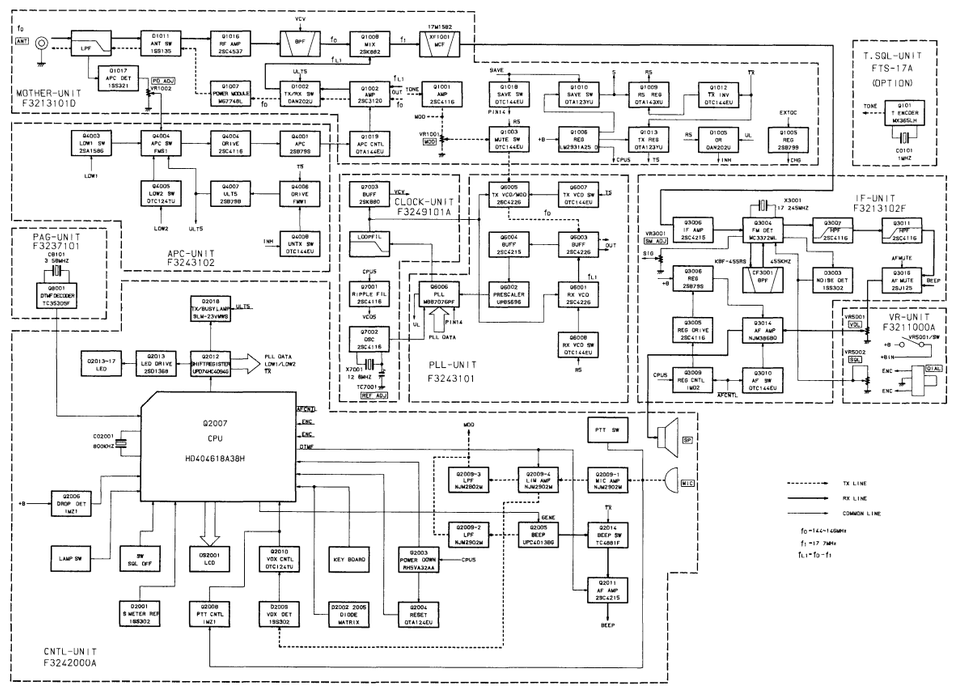

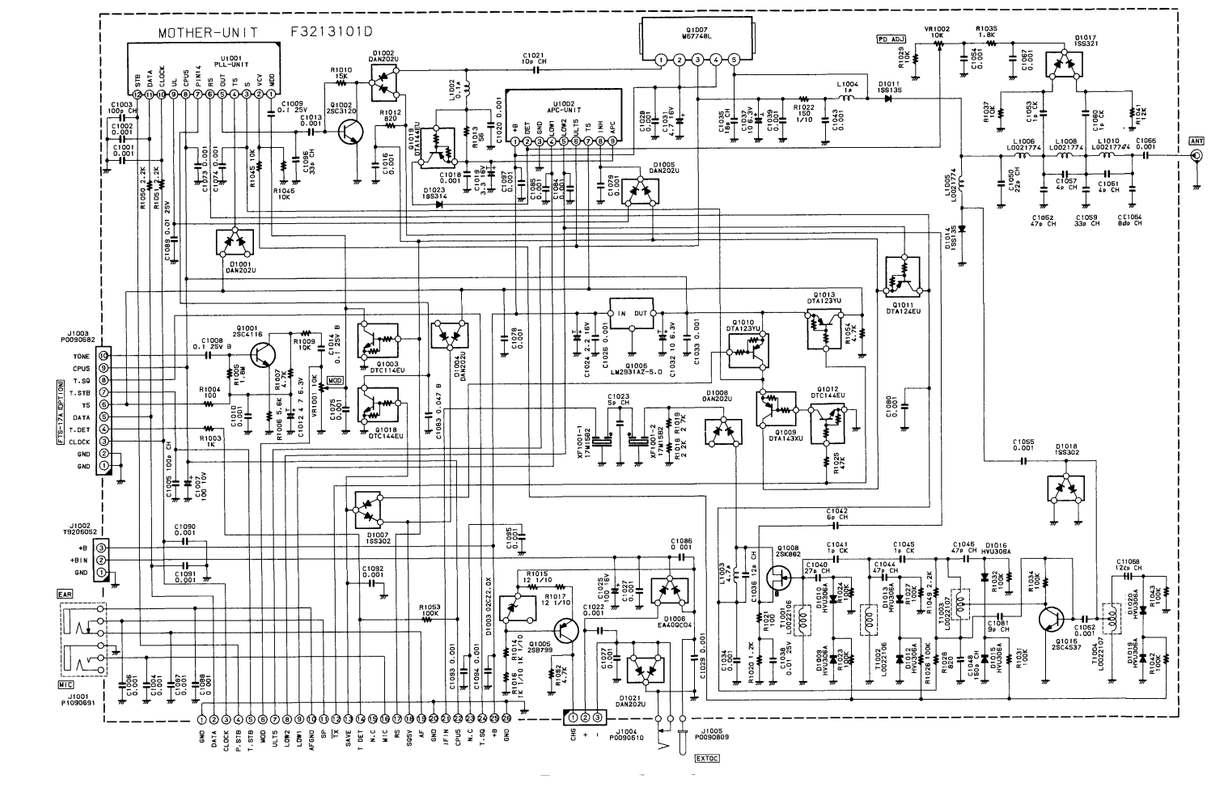

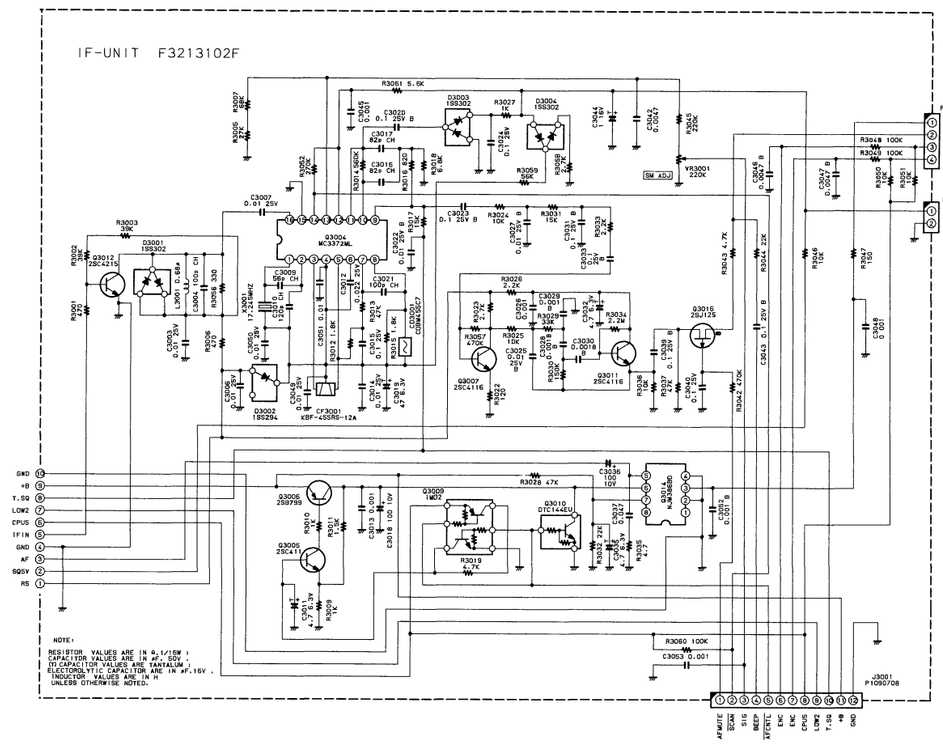

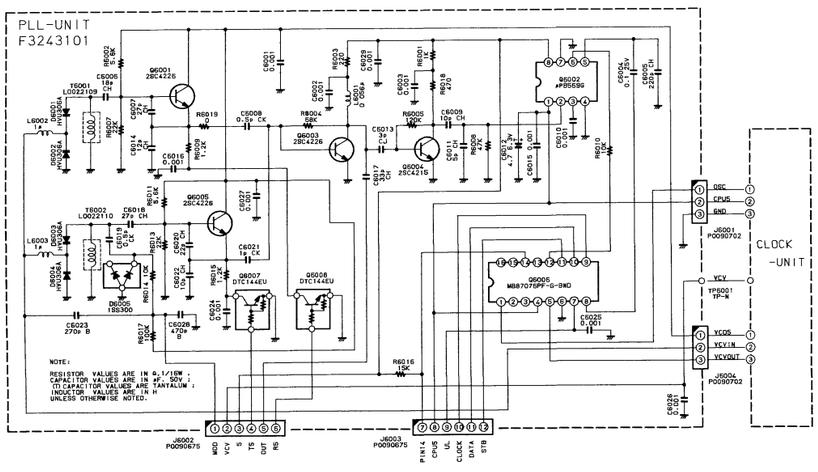

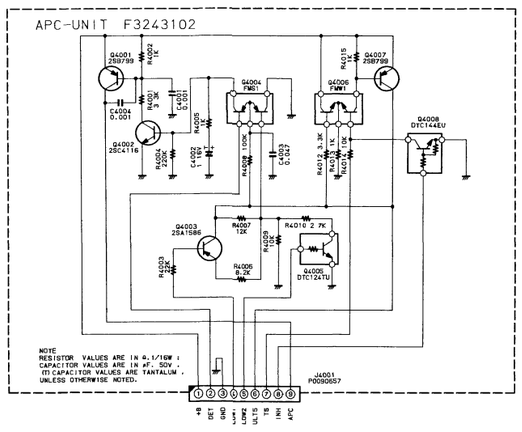

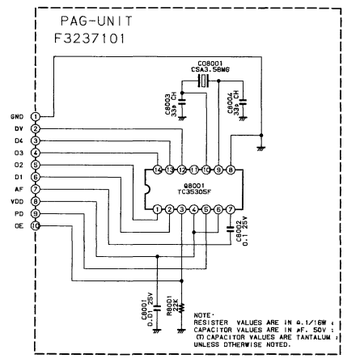

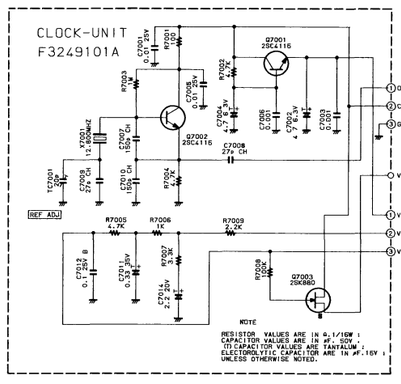

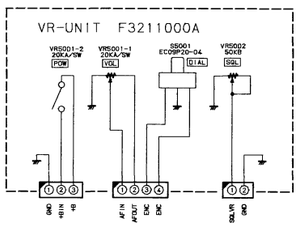

FT-416 Circuit Diagram