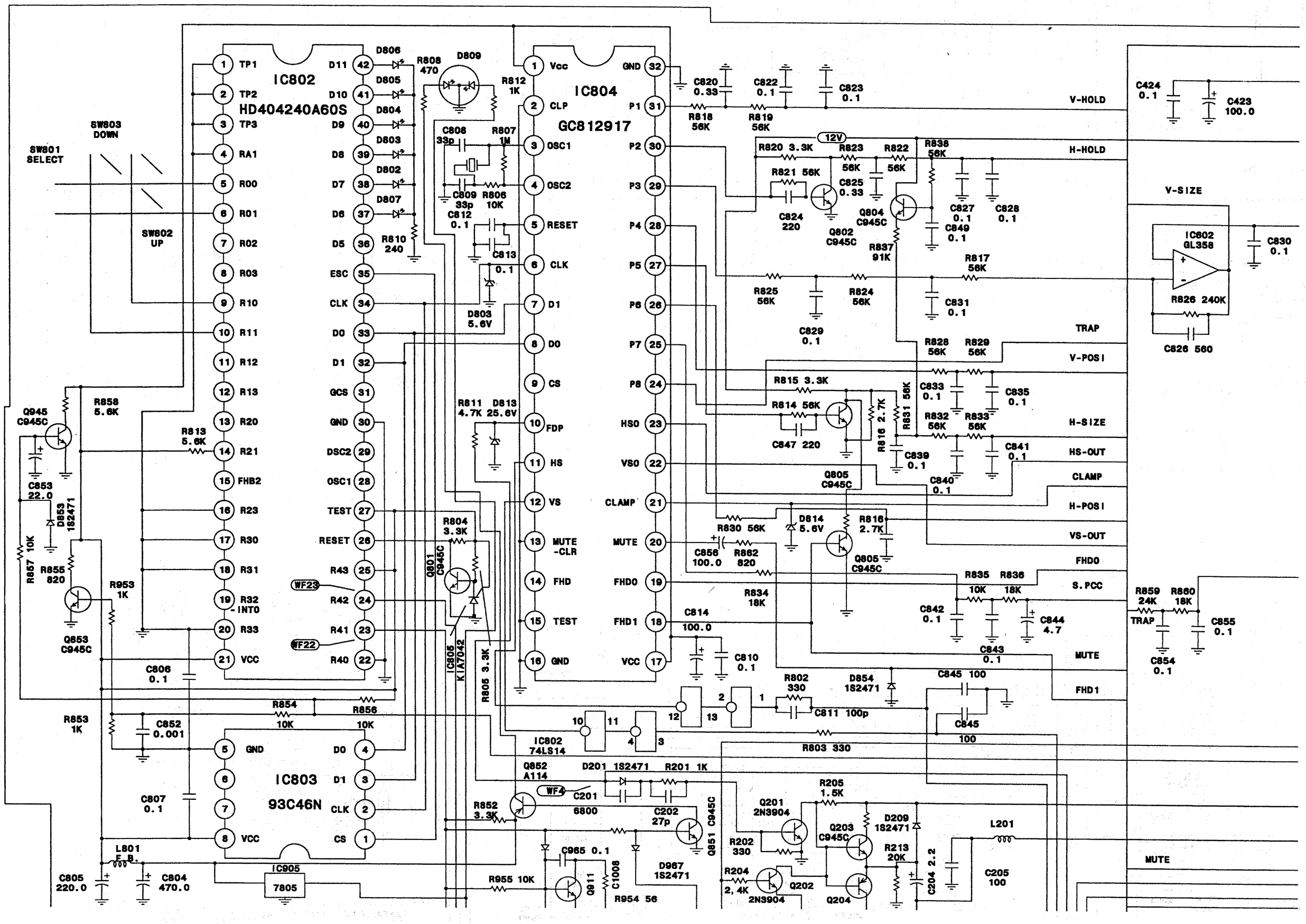
IC802
HD404240A60S
IC804
GC812917
IC803
93C46N
IC802
74LS14
IC802
GL358
IC905
7805
IC805
KIA7042
SW801
SELECT
SW803
DOWN
SW802
UP
TP1
TP2
TP3
RA1
R00
R01
R02
R03
R10
R11
R12
R13
R20
R21
FHB2
R23
R30
R31
R32
-INT0
R33
VCC
D11
D10
D9
D8
D7
D6
D5
ESC
CLK
D0
D1
GCS
GND
DSC2
OSC1
TEST
RESET
R43
R42
R41
R40
WF23
WF22
D806
D805
D804
D803
D802
D807
R810
240
R808
470
D809
R812
1K
C808
33p
R807
1M
C809
33p
R806
10K
C812
0.1
C813
0.1
D803
5.6V
Vcc
CLP
OSC1
OSC2
RESET
CLK
D1
D0
CS
FDP
HS
VS
MUTE
-CLR
FHD
TEST
GND
GND
P1
P2
P3
P4
P5
P6
P7
P8
HS0
VS0
CLAMP
MUTE
FHD0
FHD1
VCC
C820
0.33
C822
0.1
C823
0.1
R818
56K
R819
56K
V-HOLD
C424
0.1
C423
100.0
12V
R820 3.3K
R823
56K
R822
56K
R838
56K
H-HOLD
R821 56K
C825
0.33
C824
220
Q802
C945C
Q804
C945C
C827
0.1
C849
0.1
C828
0.1
V-SIZE
R837
91K
R817
56K
C830
0.1
R825
56K
R824
56K
C829
0.1
C831
0.1
R826 240K
C826 560
TRAP
R828
56K
R829
56K
V-POSI
R815 3.3K
R814 56K
C847 220
R831 56K
R816 2.7K
C833
0.1
C835
0.1
R832
56K
R833
56K
H-SIZE
C839
0.1
C841
0.1
HS-OUT
C840
0.1
Q805
C945C
CLAMP
H-POSI
R830 56K
D814
5.6V
R816
2.7K
VS-OUT
C856
100.0
R862
820
Q805
C945C
FHD0
R835
10K
R836
18K
S.PCC
R834
18K
C842
0.1
C844
4.7
R859
24K
R860
18K
TRAP
C855
0.1
C854
0.1
C814
100.0
C810
0.1
C843
0.1
MUTE
R802
330
D854
1S2471
C845 100
FHD1
C811 100p
C845
100
R803 330
R858
5.6K
Q945
C945C
R813
5.6K
C853
22.0
D853
1S2471
R857 10K
R855
820
R953
1K
Q853
C945C
C806
0.1
R853
1K
C852
0.001
R854
10K
R856
10K
C807
0.1
L801
F.B.
C805
220.0
C804
470.0
Q852
A114
WF4
C201
6800
D201 1S2471
R201 1K
R852
3.3K
C202
27p
Q851 C945C
R804
3.3K
Q801
C945C
R805 3.3K
R811
4.7K
D813
25.6V
C965 0.1
Q911
C1008
R955 10K
R954 56
D967
1S2471
R205
1.5K
Q201
2N3904
Q203
C945C
D209
1S2471
L201
R202
330
R213
20K
R204
2,4K
Q202
2N3904
Q204
C204 2.2
C205
100
MUTE

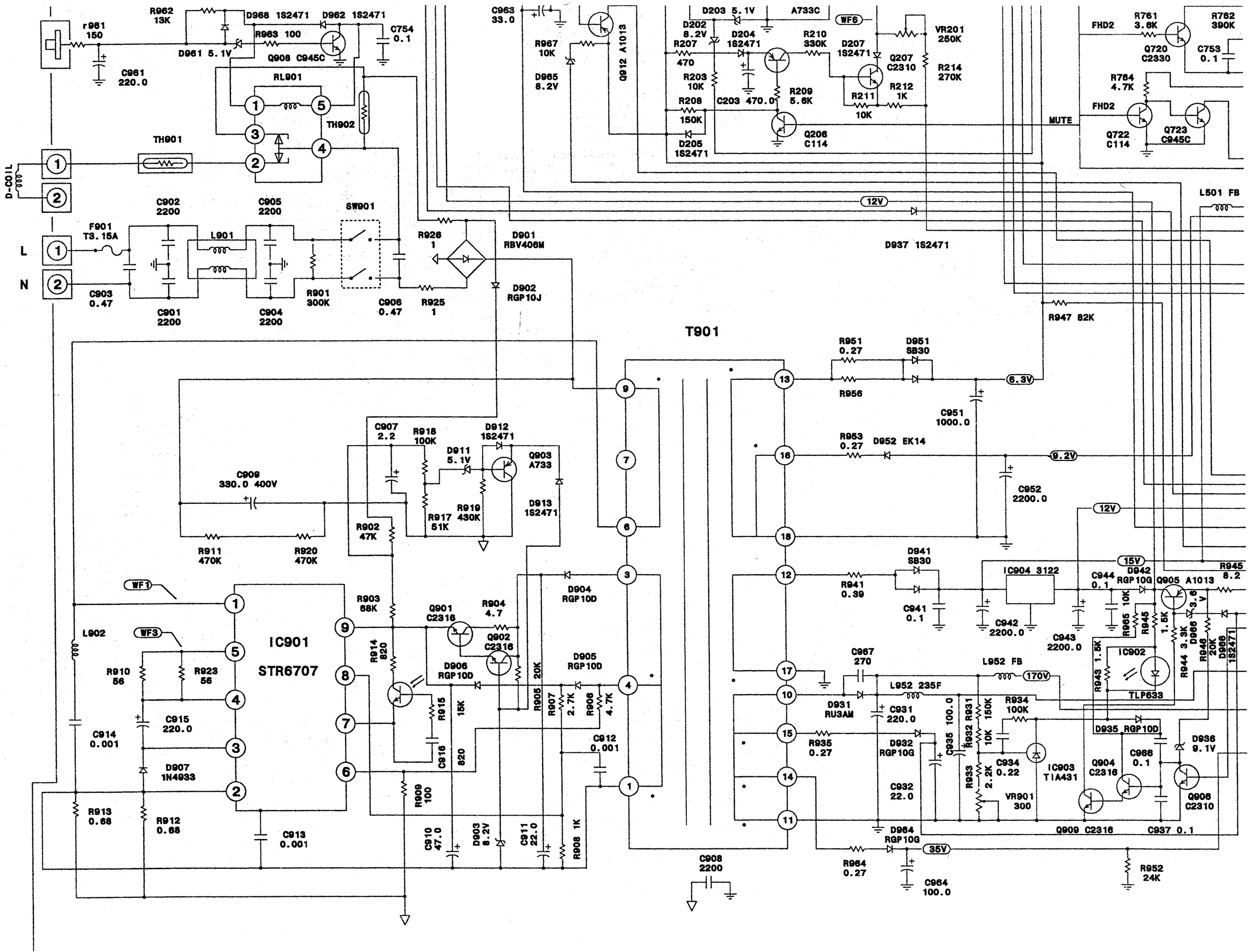
r961 150
C961 220.0
R962 13K
D968 1S2471
D962 1S2471
R963 100
D961 5.1V
Q908 C945C
C754 0.1
RL901
TH902
TH901
D-COIL
F901 T3.15A
C902 2200
C905 2200
L901
SW901
C903 0.47
C901 2200
C904 2200
R901 300K
C906 0.47
R925 1
R926 1
D901 RBV406M
D902 RGP10J
C963 33.0
R967 10K
D965 8.2V
Q912 A1013
D203 5.1V
A733C
WF6
D202 8.2V
D204 1S2471
R207 470
R210 330K
D207 1S2471
VR201 250K
Q207 C2310
R214 270K
R203 10K
R209 5.6K
R211 10K
R212 1K
R208 150K
C203 470.0
Q206 C114
D205 1S2471
MUTE
FHD2
R761 3.6K
R762 390K
Q720 C2330
C753 0.1
R764 4.7K
Q722 C114
Q723 C945C
12V
L501 FB
D937 1S2471
R947 82K
T901
R951 0.27
D951 SB30
R956
6.3V
C951 1000.0
R953 0.27
D952 EK14
9.2V
C952 2200.0
C907 2.2
R918 100K
D912 1S2471
D911 5.1V
Q903 A733
C909 330.0 400V
R919 430K
D913 1S2471
R917 51K
R902 47K
R911 470K
R920 470K
D941 SB30
15V
IC904 3122
C944 0.1
D942 RGP10G
Q905 A1013
R945 8.2
R941 0.39
C941 0.1
C942 2200.0
C943 2200.0
R965 10K
R946 20K
D966 1S2471
WF1
WF3
L902
IC901
STR6707
R903 68K
Q901 C2316
R904 4.7
Q902 C2316
D904 RGP10D
D905 RGP10D
D906 RGP10D
R910 56
R923 56
R914 820
R915 15K
R905 20K
R907 2.7K
R908 4.7K
C915 220.0
C914 0.001
C916 820
C912 0.001
D907 1N4933
R909 100
R913 0.68
R912 0.68
C913 0.001
C910 47.0
D903 8.2V
C911 22.0
R908 1K
C908 2200
C967 270
L952 FB
170V
L952 235F
IC902
TLP633
R943 1.5K
R944 3.3K
R934 100K
D931 RU3AM
C931 220.0
C935 100.0
R932 150K
R931 10K
D935 RGP10D
D936 9.1V
R935 0.27
D932 RGP10G
C934 0.22
IC903 TIA431
C966 0.1
Q904 C2316
Q906 C2310
C932 22.0
R933 2.2K
VR901 300
Q909 C2316
C937 0.1
D964 RGP10G
35V
R964 0.27
C964 100.0
R952 24K

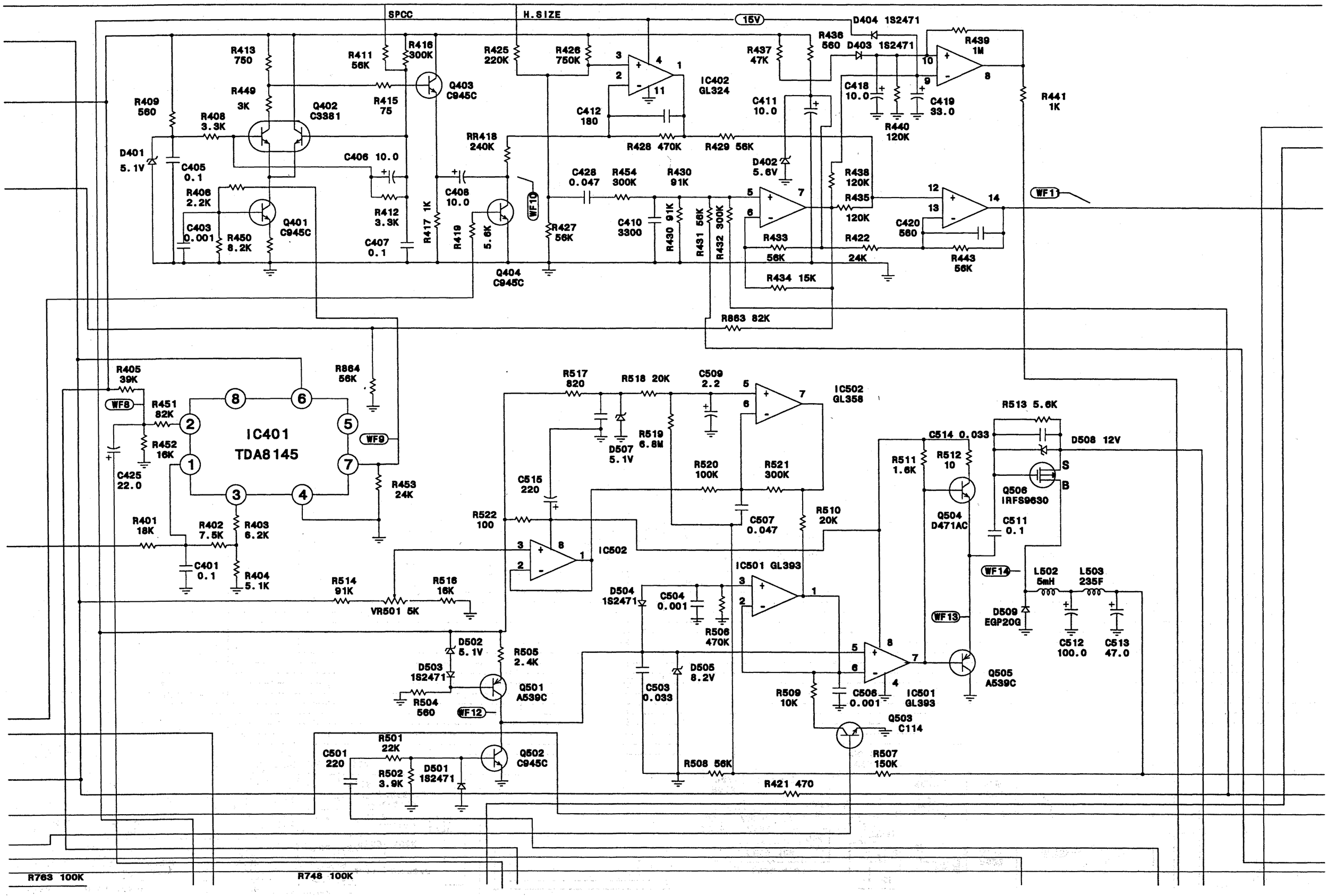
SPCC
H.SIZE
15V
D404 1S2471
D403 1S2471
R436 560
R437 47K
R439 1M
R441 1K
R413 750
R411 56K
R416 300K
R425 220K
R426 750K
IC402 GL324
C418 10.0
C419 33.0
R440 120K
R449 3K
Q402 C3381
R415 75
Q403 C945C
C412 180
C411 10.0
R409 560
R408 3.3K
RR418 240K
R428 470K
R429 56K
D401 5.1V
C405 0.1
C406 10.0
C408 10.0
D402 5.6V
R438 120K
C428 0.047
R454 300K
R430 91K
R435 120K
WF1
R406 2.2K
R412 3.3K
WF10
R417 1K
R419
5.6K
R427 56K
C410 3300
R430 91K
R431 56K
R432 300K
C420 560
C403 0.001
R450 8.2K
Q401 C945C
C407 0.1
R433 56K
R422 24K
R443 56K
Q404 C945C
R434 15K
R863 82K
R405 39K
R864 56K
WF8
R451 82K
IC401 TDA8145
WF9
R452 16K
C425 22.0
R453 24K
R517 820
R518 20K
C509 2.2
IC502 GL358
R513 5.6K
D507 5.1V
R519 6.8M
C514 0.033
D508 12V
R520 100K
R521 300K
R511 1.6K
R512 10
Q506 IRFS9630
C515 220
C507 0.047
R510 20K
Q504 D471AC
R401 18K
R402 7.5K
R403 6.2K
R522 100
IC502
C511 0.1
C401 0.1
R404 5.1K
IC501 GL393
WF14
L502 5mH
L503 235F
R514 91K
R516 16K
D504 1S2471
C504 0.001
VR501 5K
WF13
D509 EGP20G
R506 470K
D502 5.1V
R505 2.4K
C512 100.0
C513 47.0
D503 1S2471
D505 8.2V
Q501 A539C
C503 0.033
R509 10K
C506 0.001
IC501 GL393
Q505 A539C
R504 560
WF12
Q503 C114
R501 22K
C501 220
Q502 C945C
R507 150K
R502 3.9K
D501 1S2471
R508 56K
R421 470
R763 100K
R748 100K