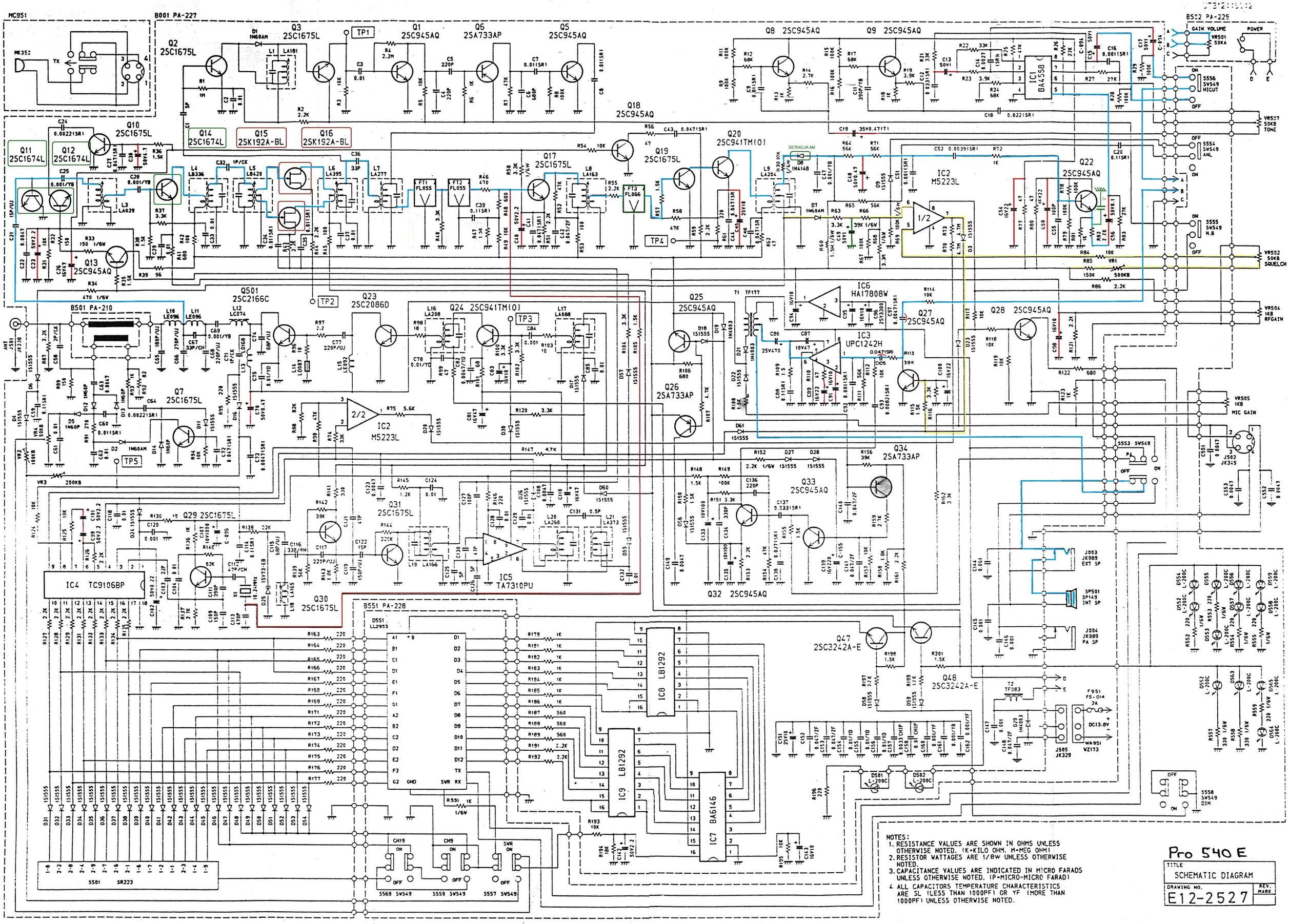

NOTES:
1. RESISTANCE VALUES ARE SHOWN IN OHMS UNLESS OTHERWISE NOTED. (K=KILO OHM. M=MEG OHM)
2. RESISTOR WATTAGES ARE 1/8W UNLESS OTHERWISE NOTED.
3. CAPACITANCE VALUES ARE INDICATED IN MICRO FARADS UNLESS OTHERWISE NOTED. (P=MICRO-MICRO FARAD)
4. ALL CAPACITORS TEMPERATURE CHARACTERISTICS ARE SL (LESS THAN 1000PF) OR YF (MORE THAN 1000PF) UNLESS OTHERWISE NOTED.

Pro 540 E

TITLE: SCHEMATIC DIAGRAM

DRAWING NO.: E12-2527

REV. MARK